INSTALLATION AND OPERATING MANUAL

FOR

ADDRESSABLE READER

MODEL 1845	Part No. 710-0028-00
MODEL 1845E	Part No. 800-0018-00

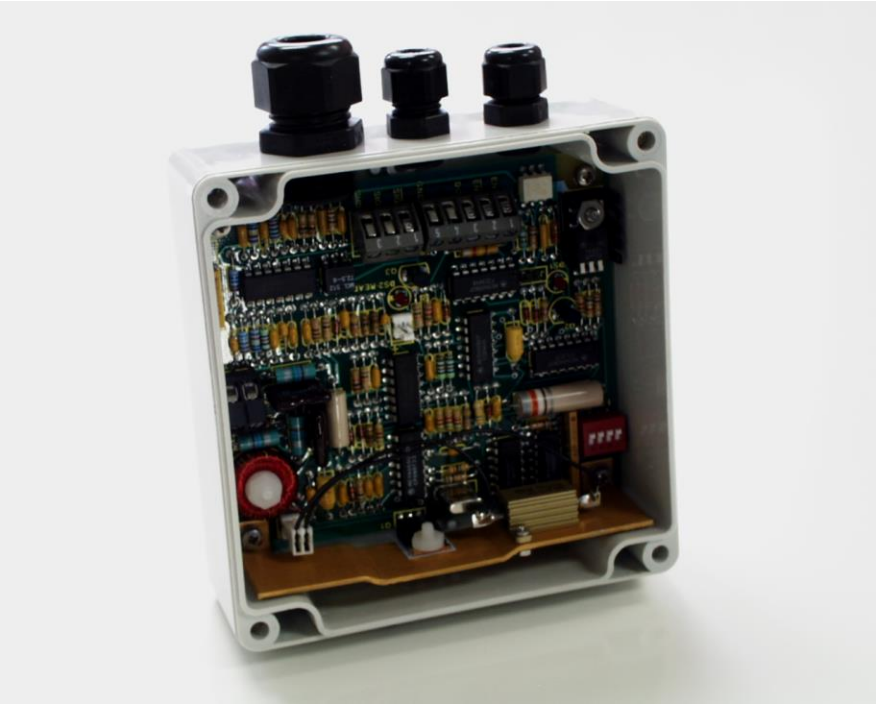

Version 1/01

TABLE OF CONTENTS

SECTION 1 - GENERAL INFORMATION

SECTION 2 - INSTALLATION

SECTION 3 - OPERATION

If you are reading a pdf version of this manual you may notice page numbers and the above contents to be off by a page from time to time. The conversion to Acrobat has a tendency to move sections as the fonts do not translate perfectly.

SECTION 1
GENERAL INFORMATION

1.1 INTRODUCTION

This manual provides information pertaining to the installation and operation of the Model 1845 Reader, PCB only, (RFID, Inc. Part No. 710-0028-00) or Model 1845E (the E signifying enclosure) (RFID, Inc. Part No. 800-0018-00).

1.2 DESCRIPTION

The Model 1845 is a versatile, low powered addressable Reader that operates with an external Antenna. Various configurations of Antennas are available from RFID or a custom Antenna can be designed to meet unique requirements. Up to 16 Model 1845's can be wired together, up to 5000 feet apart in either a star or daisy chain configuration (or a hybrid of both), and linked to a single Interface, reporting not only the Tag data read by an Antenna, but also relaying its own address enabling the Interface to recognize which read station is reporting. The Model 1845 is ideally suited for integration into conveyor systems, Automated Storage and Retrieval Systems (AS/RS) and other RFID requirements in warehouse and factory applications. What makes the 1845 ideally suited is its ability to mount the Antenna at the reading station and the Reader electronics at a more convenient location up to 12 feet away.

The Reader operates as both a transmitter and receiver. The Reader provides a low-frequency electromagnetic field at 148 kHz to energize and activate an Electronic Transponder, or Tag, in the vicinity of the Antenna. Once the Tag is energized, it modulates its data back to the Reader. The Reader detects, amplifies and filters this modulation, translates the RF data signal into a digital format and relays it to the Interface unit for use by a host computer, process controller or display and storage device. The Interface of course translates the digital data into a computer understandable language, like serial.

The Reader is simple to use and install. It requires no alignment or adjustment and can operate from different types of power sources. The unit may be mounted in a variety of ways to suit the particular application and equipment.

1.3 SPECIFICATIONS

Operating Frequency:	148 kHz +/-0.5% (transmit) 37 Khz (receive)
Tag Reading Distance:	Up to 37" (depending on Antenna, transponder and orientation)
Remote Enable:	2.5 mA, Opto-isolated
Signal Output:	75 ohms, balanced
Address Selection:	4 position DIP switch
Cable Distance to Interface:	Up to 5000 feet (with shielded twisted pair cable)
Connectors**:**	Angle entry terminal strips:
Antenna**:**	TB3 - 1 and 3
Signal to Reader:	TB1 - 1 and 2
Remote Enable:	TB2 - 1 and 2
Power:	TB2 - 3 and 5
Power Supply Voltage:	
DC:	18 to 32 VDC Regulated
Power Supply Current:	200 mA (max)- Enabled 150 mA (typ)- Enabled 30 mA (typ)- Disabled
Remote Antenna	
Inductance:	1.10 mH +/- 3%
Resistance:	12 Ohms (max)
Temperature Range	
Operating:	-40 to +70 degrees C
Non-operating:	-55 to +85 degrees C
Dimensions	
PCB:	4.0 x 4.4 x 1.1 inches
Enclosure:	4.75 x 4.75 x 2 inches
Weight:	0.25 lbs. (0.12kg)

SECTION 2
INSTALLATION

2.1 INTRODUCTION

This section contains information for unpacking, inspection and installation. Installation includes power, signal and remote enable wiring as well as setting Reader addresses and mounting of the Reader itself.

2.2 UNPACKING AND INSPECTION

If the shipping carton is damaged or shows evidence of abusive handling, inspect the Reader for visible damage including dents, scratches, etc. If the unit appears damaged, contact the carrier and RFID, Inc. Sales or Customer Service Departments immediately. Keep the shipping and packaging material for the carrier's inspection. RFID, Inc. will arrange for repair or replacement of the damaged unit without waiting for the claim settlement with the carrier.

2.3 INSTALLATION SUMMARY

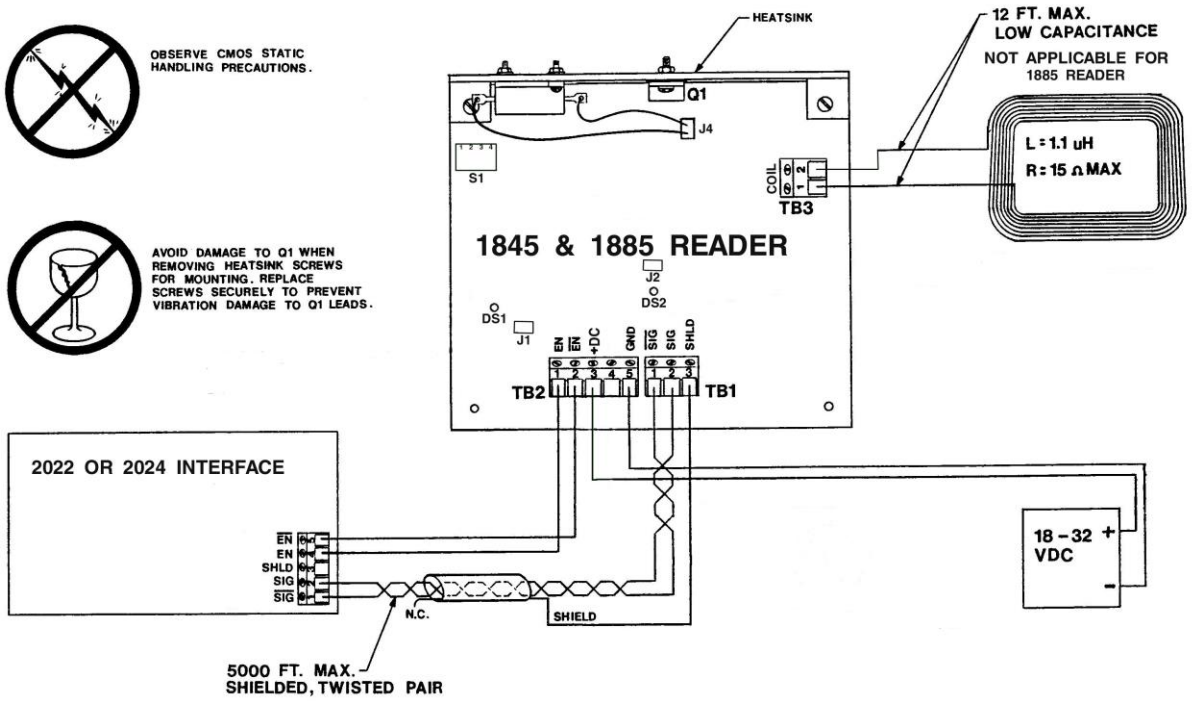

Figure 2-1 Installation Summary

Connect Antenna to TB3 - 1 and 3. No polarity exists, meaning it does not matter which screw terminal you connect the white or black Antenna leads to.

Basically there are 3 sets or pairs of wires to consider, Power and Ground, Signal and Signal BAR, Enable and Enable BAR. These can be organized into 3 sets of 2 conductor cables, 1 set of 2 conductor and 1 set of 4 conductor cables, or 1 set of 6 conductor cable. Section 2.6 details these options and references cables by approved and recommended manufacturer part number.

Connect SIG and SIG BAR outputs from TB1 - 1 and 2 to Interface inputs SIG and SIG using #20 - #28 AWG twisted pair wire. If used, connect shield to TB1 - 3, leave unconnected at other end.

Connect EN and EN BAR outputs from TB2 – 1 and 2 to Interface inputs EN and EN BAR outputs using #20 - #28 AG twisted pair wire. If used, connect shield to Interface.
Select power source. Leave off while making connections:

DC - Connect DC+ to TB2 - 3.
Connect DC- (GND) to TB2 - 5.

J1 Enable Override Pins, see page 18, section 2.15.
J2 Remote Read Output Pins, see page 19, section 2.16.
DS1 Reader Enabled LED Indicator, see page 20, section 3.2.
DS2 Visual Read LED Indicator, see page 20, section 3.3.
S1, Reader Address Dipswitches, see page 17, section 2.12.

2.4 POWER REQUIREMENTS

The Reader may be powered from regulated or linear DC power sources having the following characteristics:

Voltage DC:	Voltage Range:	18 to 32 volts
	Ripple:	100 mV p-p (max.)
Current:	Operating:	200 mA. (max.)
		150 mA. (typ.)
	Disabled:	30 mA (max.)

RFID, Inc. can provide transformers and power supplies suitable for use with the Model 1845. If you provide your own power supply, it is recommended that you **avoid switching power supplies.** These supplies produce electromagnetic interference (EMI) that **WILL** interfere with the operation of the Reader.

The Reader assembly can operate from grounded or floating supplies. It may operate from a separate ground reference with respect to the interface or host computer.

2.5 POWER SELECTION

This section left blank.

2.6 RATING POWER SUPPLIES

A single supply can be used to power multiple Readers within a system. When rating the supply, it must be able to provide the maximum operating current for the number of Readers that will be enabled at any one time (typically 1 per Interface) plus the disabled current for the remaining connected Readers in the system (maximum of 15 per Interface). The equation to calculate your power supply's current requirements works out as follows:

$$It = (Nr * Io) + (Ns – Nr) * Is$$

Where:

It = Total current required
Nr = Number of Interfaces (or the # of Readers that will be enabled at any 1 time)
Ns = Total number of Readers powered
Io = Reader operating current (200 mA)
Is = Reader standby current (30 mA)

Thus, power supply selection is a function of many considerations. For a reliable system, powering each Reader with its own power supply is best as if a supply becomes inoperable impact is limited. But this method can also be the costliest. Powering many Readers with a single power supply is more economical. However if the distance between Readers is great, expense saved on power supplies might be spent of cabling. Long power cables may produce voltage drops resulting in a lower voltage at the Reader and ultimately reduced read range between the Antenna and Tag.

The following pages contain examples of possible power supply configurations. Power and Interface cabling are run separate in these examples, but of course may be run together in a single 6 conductor cable to support the signal and enable wiring, powered through the Interface with a dual 24 VDC/5 VDC supply as the Interface requires only 5 VDC.

Example 1: 1 Multiplexing Interface controlling 16 Readers all powered by the same supply.

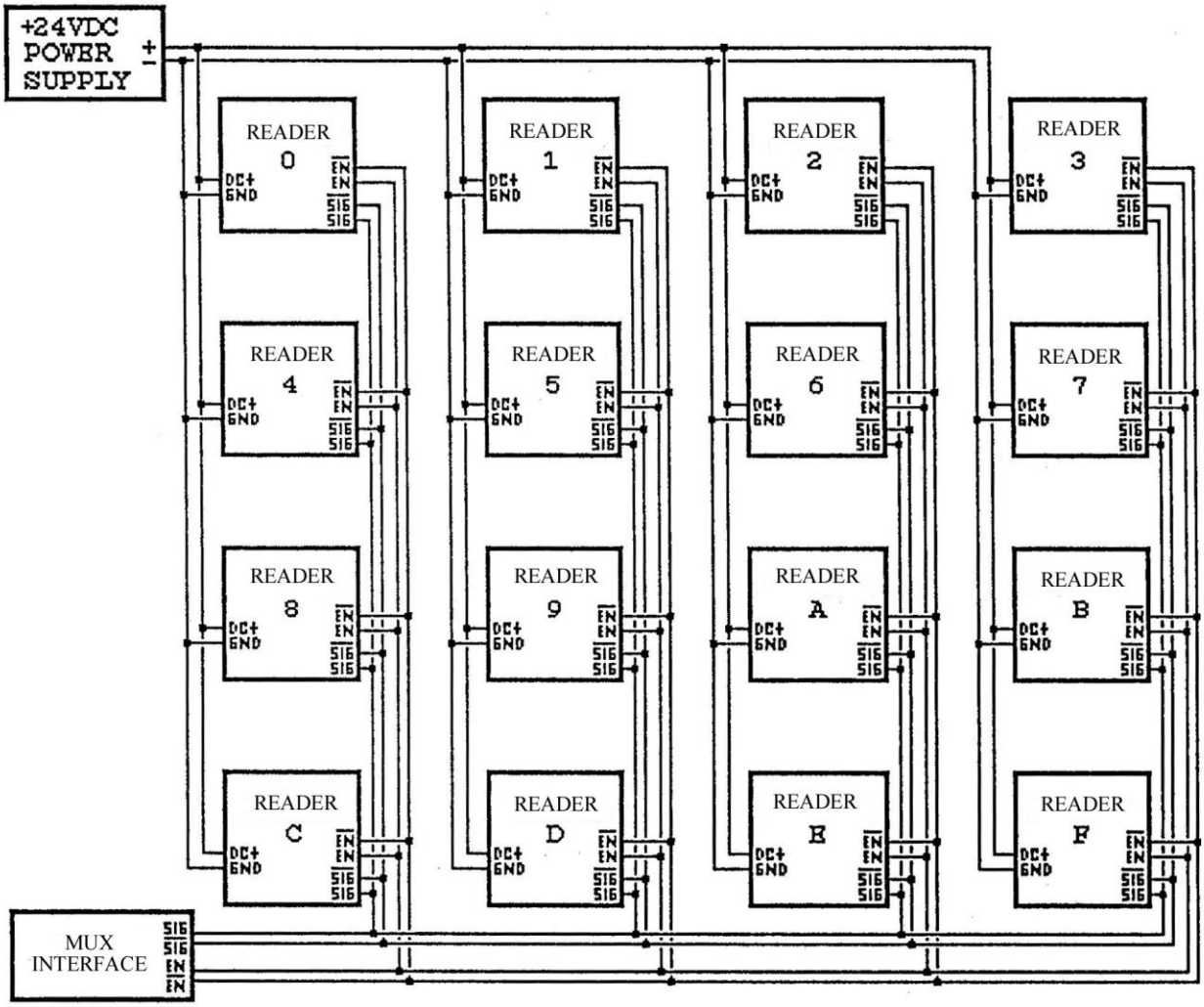

Figure 2-2

With only 1 Interface in the system, Nr is easy. It's 1. With 16 Readers attached Ns is 16.
Equation:

$$It = (1 * 200 \text{ mA}) + (16 - 1) * 30 \text{ mA} = 650 \text{ mA}$$

Example 2: 2 Interfaces controlling 8 Readers each, with all 16 Readers powered by the same supply.

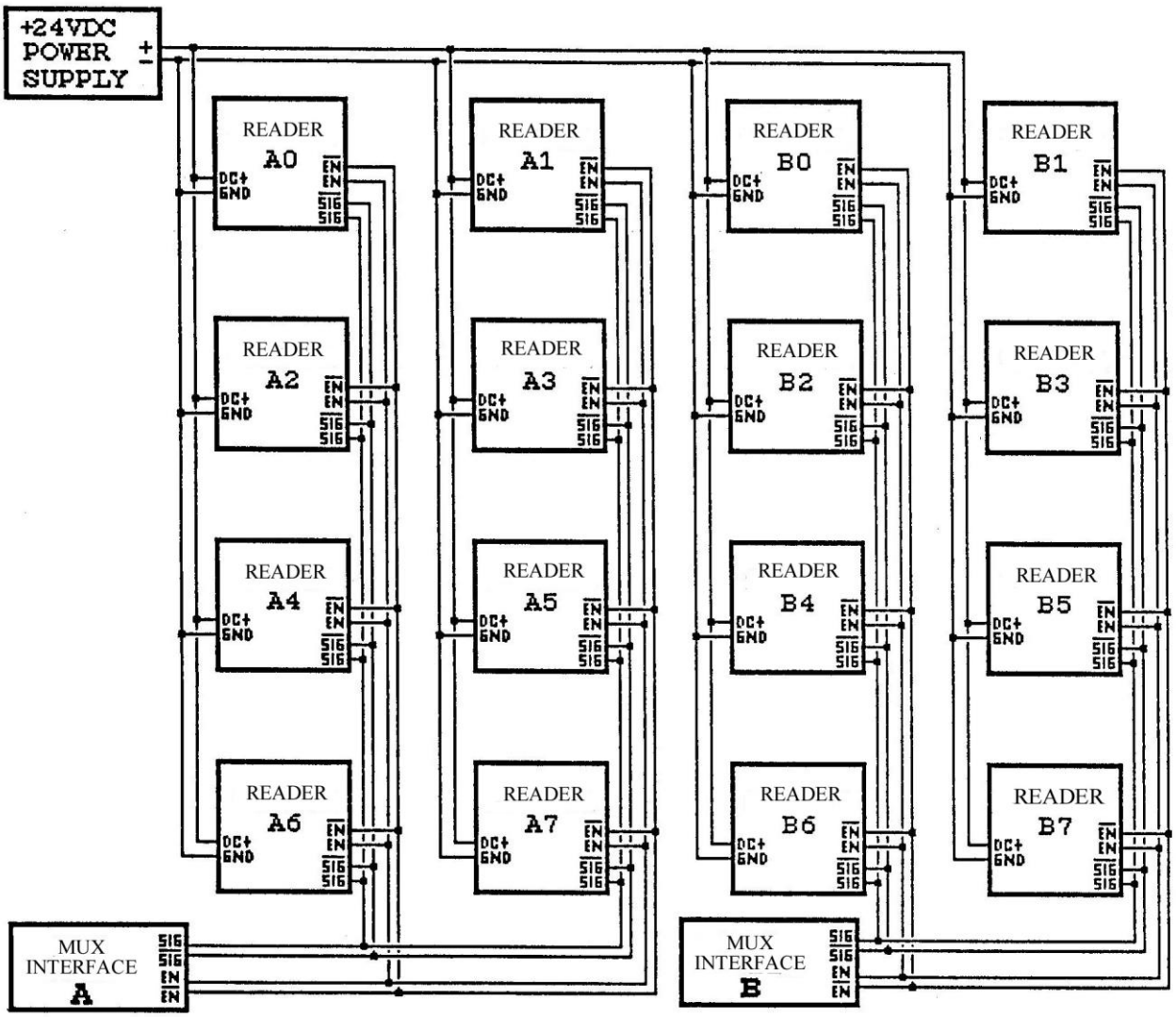

Figure 2-3

Since there are 2 Interfaces in the system, Nr equals 2 and Ns is still 16. Equation:

$$It = (2 * 200 \text{ mA}) + (16 - 2) * 30 \text{ mA} = 820 \text{ mA}.$$

Example 3: 16 Readers and 2 Interfaces with 2 power supplies each powering 8 Readers.

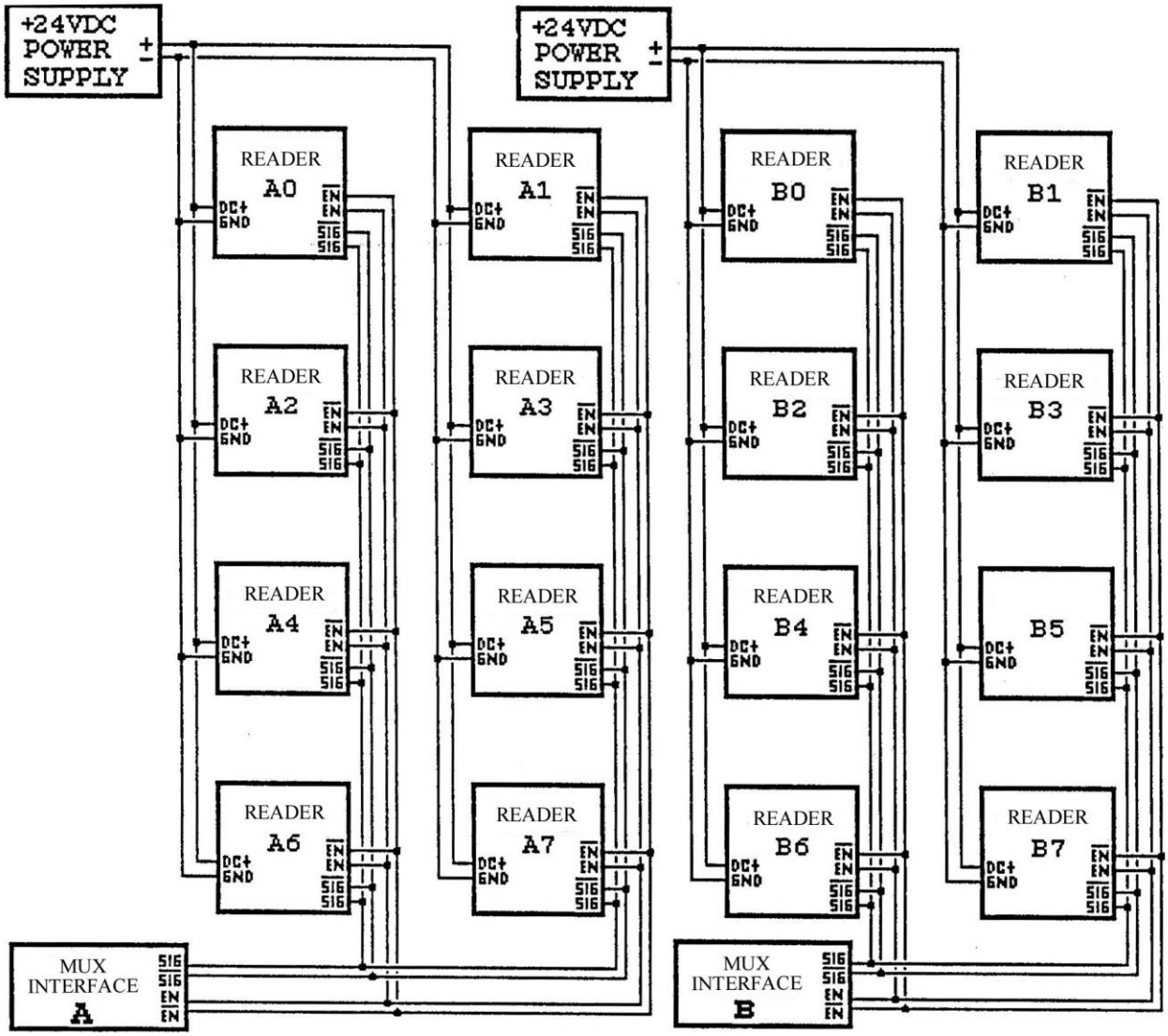

Figure 2-4

Since each supply powers 8 Readers controlled by a single Reader, Nr is 1 and Ns is 8 for each.

$$It = ((1 * 200\ mA) + (8 - 1) * 30\ mA) * 2 = 410\ mA$$

Example 4: 16 Reader and 2 Interfaces with 2 power supplies each powering 8 Readers from each Interface.

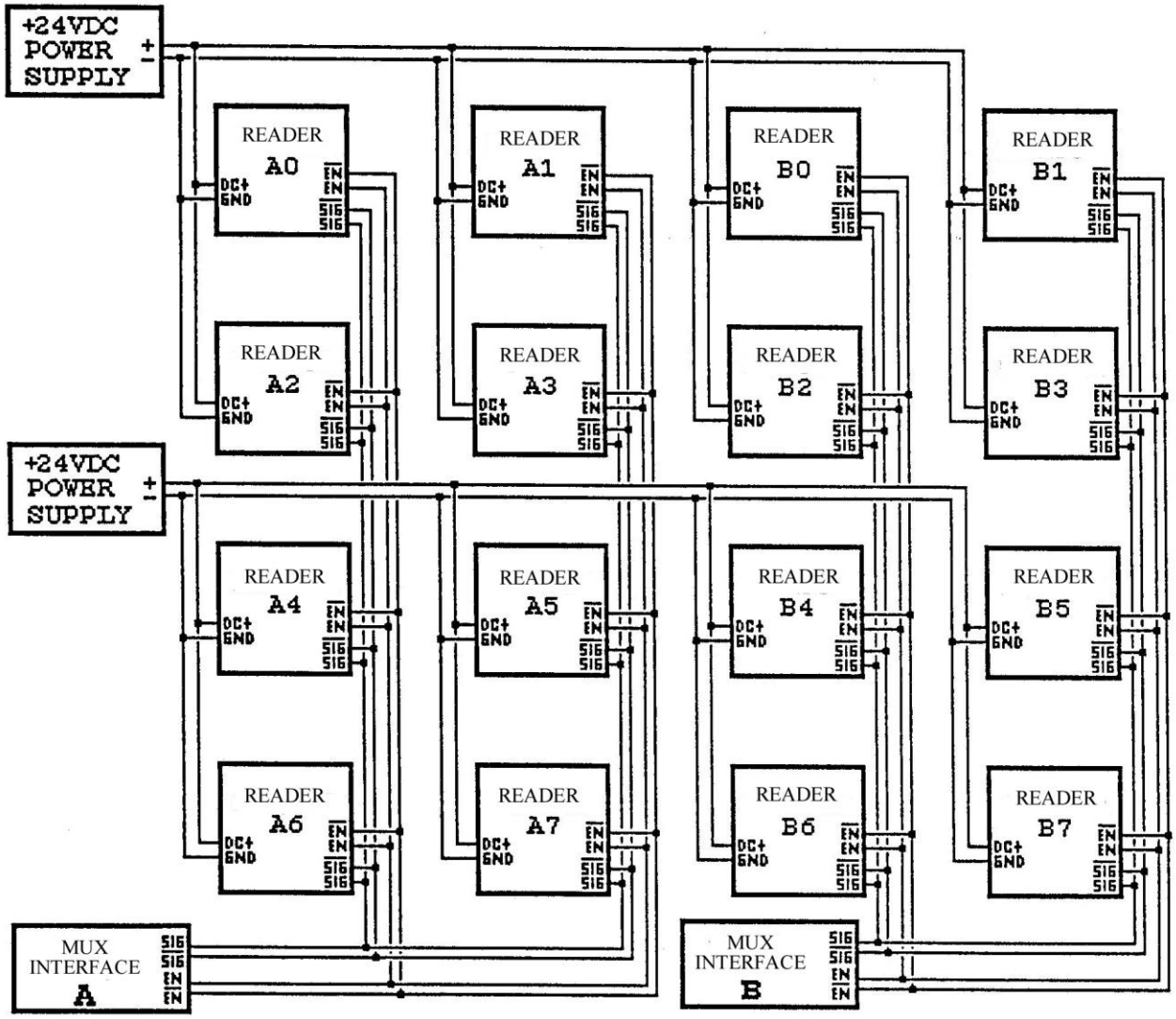

Figure 2-5

Since each power supply may eventually power 2 enabled Readers, Nr is 2 and Ns is still 2.
Equation:

$$It = ((2 * 200\ mA) + (8 - 2) * 30\ mA) * 2 = 580\ mA$$

2.7 POWER CONNECTIONS

Power wiring should be connected to terminal strip TB2 using #20 to #28 AWG insulated, stranded wire. The power source should be turned off while making connections to the Reader. Wires should be stripped approximately 3/8 of an inch. Tinning of these ends is recommended.

DC Supply - Connect the positive DC input to TB2 location 3 (DC+) and the DC return to TB2 location 5 (GND). Reverse polarity can cause permanent damage so verify connections before applying power. There is no onboard over current protection so an external fuse is recommended.

2.8 SIGNAL CABLING

Signals wires of course carry the Tag data and Reader address to the Interface. For best performance, signal connections should be made with shielded, twisted pair cable. If the signal wires are combined in the same cable with the power and remote enable wires, then they should be separately shielded. The following cables are recommended for general use:

APPLICATION	CABLE DESCRIPTION	PART NUMBERS
Signal Only	2 Conductor paired cable #22 AWG w/foil shield Polyethylene & PVC 60 degrees C	Belden 8761 Columbia C2514 Manhattan M13226 RFID, Inc. PN 214-2202-00
Signal and Enable Or Signal and Power Or Power and Enable	4 Conductor paired cable 1 pr. 22 AWG w/ foil shield 1 pr. 22 AWG unshielded Polypropylene & PVC 60 degrees C	Belden 8724 Alpha 2464 Manhattan M4451 TELSOR PN 214-2204-00
Signal Power And Enable	6 Conductor paired cable 2 pair 24 AWG w/foil shield 1 pair 22 AWG unshielded PVC, 80 degrees C	Belden 8786 Manhattan M14477 TELSOR PN 214-2206-00

Signal outputs are connected from terminal strip (TB1) on the Reader to the SIG and SIG BAR inputs on the selected Interface. Wires should be stripped approximately 3/8 of an inch and tinned. The SIG output from the Reader (TB1-2) connects to the SIG input on the Interface. The SIG output (TB1-1) connects to the SIG input on the Interface. If shielded cable (recommended) is used, the shield should be connected on one end only. It is recommended to connect the shield

to the Reader SHLD connection (TB1-3) and leave the other end floating. It is acceptable to connect the shield to the Interface and leave it floating on the Reader. Over short distances or in environments that are free of electromagnetic noise the shield may be omitted.

DO NOT CONNECT THE SHIELD TO BOTH THE READER AND INTERFACE!

A note about "PLENUM" cabling, plenum cable eliminates the need for using conduit when installing cables in air plenums. In typical modern buildings, a plenum exists between the drop ceilings and the floors that support them. Because these air ducts often run across an entire story they can be a convenient place to run cable, but they can also be an invitation to disaster if fire breaks out. Fire and smoke can spread rapidly throughout the air duct system if the fire is able to feed on combustible materials. The cables designated Plenum are approved by the NEC and UL because of their flame-resistant and low smoke emission properties. While Plenum cable costs more than conventional cable, the overall installed cost is generally less because it eliminates the need for conduit installation.

PLENUM
Cable, Paired, 2 Conductor Belden 89182
#22 AWG with foil shield
NEC 725, Class 2 classified

2.9 REMOTE ENABLE CABLING

Reader operation is controlled from an Interface remotely via the enable inputs (EN, EN BAR) at TB2 locations 1 and 2. Disabling the Reader shuts off the Antenna's 148 KHz transmissions and reduces current draw to 30 mA (max). We recommend users not employ the use of Remote Enable through the pins at PCB address J1. This is normally used for manufacturer testing and quality control purposes. If you feel you must use J1 to test a single Reader's performance, you can do so by inserting a shorting jumper or shunt across J1 and the EN/EN BAR inputs may be left unconnected. The shunt overrides the remote control and continuously enables the Reader regardless of the EN/EN BAR inputs. Another method, and that we recommend, is to remote enable the Reader by use of the Assign Command. This of course necessitates wiring the EN and EN BAR connections. The Model 1845 is not normally supplied with the shorting shunt installed.

The remote enable feature is used by directly connecting the Interface EN output to the Reader EN input and the Interface EN output to the Reader EN input. Interfaces with this feature, Model 2022E and 2024E have ENABLE and DISABLE commands. Multiplexing Interfaces use this output to control Reader multiplexing.

To enable the Reader remotely, a custom interface may be designed to provide the following characteristics:

ENABLED STATE: Differential Voltage = +3V (min) to +15V (max) into 500 OHM Load.

DISABLED STATE: Differential Voltage = +0.5V (max) to -5V (min) into High Impedance Load.

Differential voltage is measured from the EN to the EN terminal. That is, a +3V differential voltage means that the EN terminal (TB2 Pin 1) is 3.0 volts above the EN terminal (TB2 Pin 2). The remote enable circuit on the Reader is an opto-isolator with a 470 ohm, .5 watt current limiting resistor in series. 5 mA is required to turn on the isolator. The following 2 control schemes are available for remote control:

SOURCE: Connect EN to Ground.
Connect EN input to the output of a logic device capable of sourcing 5 mA minimum.

Set EN to 0 volts to disable the Reader.
Set EN to +5 to +12 volts to enable the Reader.

SINK: Connect EN to +5 to +12 volts.
Connect EN input to the output of a logic device capable of sinking 5 mA minimum.

Set EN to 0 volts to enable the Reader.
Set EN to EN voltage to disable the Reader.

2.10 ABOUT SHIELDING

Shielding is recommended for both signal and enable wiring especially if long lengths of wire are used, or when operating in an environment of high electromagnetic noise. Each wire's shield should be connected at only 1 point, connecting both ends of a shield will produce a closed loop in which noise has no way to exit. A daisy chain connecting multiple Readers counts as a single wire, and the shields should be connected together, but not to the Reader, at each drop along its run. Since shield connections are recommended at the source of the associated signal, SIGNAL shields are connected to Readers and ENABLE shields are connected to the Interface. If the SIGNAL wires are combined in the same cable with the ENABLE wires their shields are common and connected to one Reader. The figure below offers an excellent shielding depiction.

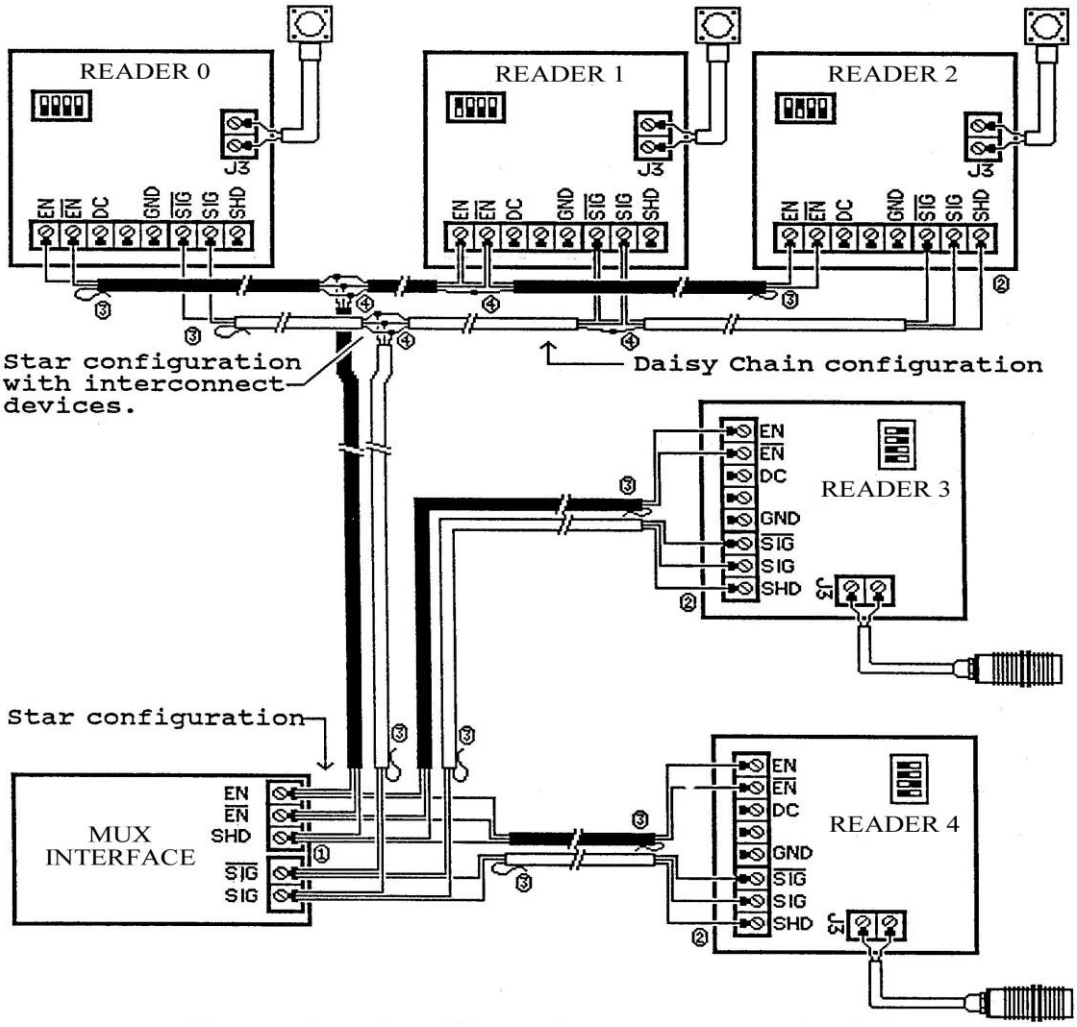

Figure 2-6 Shielding

Note: Each shield is connected at a single point only
1. Enable shields at the Interface
2. Signal shields at the Readers

3. Other ends of both left unconnected
4. Shields in daisy chain tied together in free air, not through PCB

2.11 ANTENNA CONNECTIONS

Antenna connections are made at TB3 locations 1 and 3 marked + COIL -. The center position of TB3 is not connected. The COIL - connection is internally connected to the Reader's ground reference. Antenna polarity is irrelevant in the case of a single coil and must be observed only if multiple Reader Antennas are to be employed to create multiple fields. Connected Antennas have the following characteristics standard from our factory:

INDUCTANCE:	1.1 mH +/- 3% at 10KHz
RESISTANCE:	15 Ohms max.
SELF-RESONANT FREQUENCY:	500 KHz min.

Cable distance to the Antenna is 12 feet using the proper cable. It is possible to increase or decrease the amount of Antenna cable, however please contact RFID, Inc. first. Since the cable is a part of the Antenna, its length affects the attenuation of the overall circuit and capacitance adjustments may have to be made at 1845. Making cable length adjustments on your own may result in degraded read range operations. The connection is made with low capacitance (i.e. unshielded), high voltage cable. Compatible Antennas, enclosures and cables are available from RFID, Inc.

2.12 SETTING ADDRESSES THROUGH 4 TWO POSITION DIP SWITCHES

Each Reader's address is set via the 4 two position DIP switches located on the PCB. Every Reader connected to an Interface must have a unique address. The DIP package represents 4 binary bits (1's or 0's) that comprise a hexadecimal digit (0 thru F) that is reported by the Interface along with Tag data. The left most switch, switch 1, is the least significant bit. Notice that the switches are labeled 1 to 4, not labeled with their true values of 1, 2, 4, and 8. If you do not understand binary or hexadecimal, simply look at the illustration below for a graphic understanding of how to set the addresses.

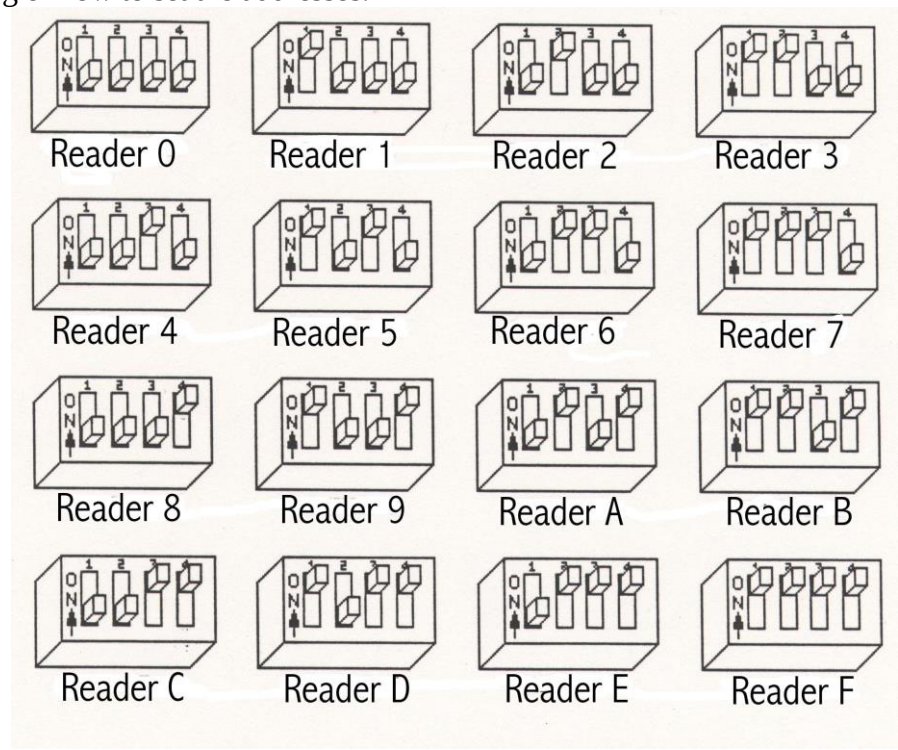

Figure 2-7 Setting Reader Addresses

2.13 MOUNTING CONSIDERATIONS

The Reader's operations can be affected by metal in close proximity to its Antenna. Some Antennas are designed however to specifically perform unhindered when mounted on metal. Please consult the RFID, Inc. Customer Service or Sales departments. A high concentration of metal can distort or block fields created by the Antenna as well as absorb some of the energy it creates. For the Model 1845 Reader, the following guidelines should be used in determining mounting locations:

- Operation is not significantly affected by small isolated metal objects such as screws or other hardware.

- Large conductive areas such as metal plates should be kept at least half the Antenna's diameter from the Antenna.

- The impact on Reader operation is primarily a function of the area enclosed by the conductor. That is, a closed loop of wire of a given area can have nearly the same impact as a solid sheet of metal of the same area.

Standard anti-static precautions should be observed when handling 1845 Readers outside of enclosures.

If the heatsink connection holes are to be used to mount the Reader, caution should be observed when removing the existing screws. When the screws are removed, angular force on the heatsink should be avoided to prevent stress on the pins of transistor Q1. Following mounting of the Reader board, the heatsink must remain securely attached to the Sensor to avoid damage to Q1. Q1 must maintain secure contact with the heatsink to avoid component overheating; and the external resistor must be connected to jumper J3. If the standard heatsink is replaced by a custom configuration, sufficient heat dissipation must be provided to avoid damage to electronics.

2.14 EXTERNAL INTERFERENCE

Since the Model 1845 transmits and receives electromagnetic fields, it is susceptible to interference from external sources of intentional and unintentional electromagnetic radiation. At its frequency of operation, the effect of external sources falls off rapidly with distance. The operation of the unit may be degraded by lower level sources of interference within 20 feet or so of the Reader and higher level sources up to 100 feet away. The following items should be given consideration when operating the Reader:

- Unshielded CRT's should be kept at least 20 feet from the Reader to reduce the effect of the deflection yoke magnetic field. Orientation of the screen to the Reader can have an affect on the exact distance of the interference. Try turning the screen, or changing its Hz settings at which it operates.

- Signal lines from the Reader should always be run through shielded twisted pair cable.

- Power input lines should be well filtered and free of switching spikes caused by thyristors, SCR`s, etc. which create interference across a broad spectrum of frequencies.

2.15 ENABLE OVERRIDE SHUNT J1

Connecting the 2 pins of connector J1 together overrides the multiplexing operation normally controlled by the EN inputs and causes the Reader to be constantly enabled and all other Readers disabled. This option is available for testing purposes but is not recommended as a normal method of operation. Alternatively, the same goal of enabling a single Reader can be achieved through the Assign command from the Interface. See that manual for further details.

When J1 is closed on a Reader or the Reader has been remotely enabled via the Assign command, that Reader's Enable indicator at PCB address DS1 should be constantly illuminated. The Reader will provide a valid read indication only if it has been designated as Reader #0 via the address switches.

Since the Reader is now constantly enabled and the Interface thinks it is not when closing J1, a Tag presented to said Reader will be reported from the Interface to your controller as being present at all Readers.

2.16 REMOTE READ OUTPUT J2

Pins at PCB address J2 provide a connection to a remote read circuit that may be used to provide an audible or visual indication of a valid read at that Reader. J2 is an AMP 640456-2 type, SIP locking header with 2 contacts at .1" centers. The recommended mates for this header are available from AMP under these part numbers:

TIN PLATED	GOLD PLATED	WIRE SIZE
640440-2	641190-2	22 AWG
640441-2	641191-2	24 AWG
640442-2	641192-2	26 AWG
640443-2	641193-2	28 AWG

This circuit is ideal for driving audible piezo alarms with audible control available on the open market or available from RFID, Inc. as part number 202-0001-00.

This circuit can also drive LED's and DC lamps but care must be taken when driving inductive loads such as relays. The inductance of a relay coil when it is turned off produces a voltage surge that will feed back into the power circuitry. A "snubber" circuit can be used to prevent damage from this effect.

The positive pin of J2 is connected directly to the positive DC input. Upon detection of a valid red pulse the Reader provides a path to Ground on the other pin of J2 through a MOS FET transistor. The transistor is rated to carry 100 mA of current and has a maximum on-state resistance of 9 Ohms. There is no current limiting resistor in series with the transistor so care must be taken to limit the current in the external circuitry.

WARNING!
PERMANENT DAMAGE WILL OCCUR TO THE READER OR POWER SUPPLY IF J2'S PINS ARE CONNECTED DIRECTLY TOGETHER OR IF THE READ INDICATION IS ACTIVATED WITH LESS THAN 250 OHMS RESISTANCE.

SECTION 3
OPERATION

3.1 INTRODUCTION

Reading Tags is easy. Simply present the Tag within the Reader Antenna's RF field, the Interface will Enable the Reader, the Reader will report the Tag along with its address, and the Interface will disable the Reader moving on to Enable the next. If a Tag is left in the Reader's RF field when the Interface Enables the Reader on a subsequent occurrence, the Reader will still report it to the Interface, but whether the Interface reports it a second time to your controller depends on the type of Interface and how it has been configured to operate.

3.2 READER ENABLED LED @ PCB ADDRESS DS1

This LED indicates when the Reader is active, enabled, generating 148 KHz on its Antenna and when a Tag is being reported. When in operation this LED will flash for 15 to 30 milliseconds at intervals dependent upon the total number of Readers installed on an Interface. Although some LED's will appear to blink faster, slower, dimmer or brighter than others, this is normal but the units are operating correctly.

It is possible for a Tag not to be read if it travels by too quickly while the Reader has not had an opportunity to Enable. Discussions on this subject are held in the Interface manual.

3.3 VISUAL READ INDICATOR @ PCB ADDRESS DS2

LED DS2 is illuminated by the Interface as an indication of a valid Tag read. Upon command from the Interface, this LED is illuminated for 70 milliseconds (nominal). The illumination of this LED corresponds to the activation of the circuit connected to J2.

3.4 OPERATING AND TROUBLESHOOTING

Now that installation is complete it's time to turn on the power. In a properly installed and functioning system Enabled LED DS1 will blink about twice a second indicating the Reader has been enabled by the Interface. If this LED is not active, check the Enable signal wiring. If the wiring checks out, look at the Interface's operation. Is it on? Is it assigned to scan the Reader in question? If all else fails, monitor the Enable inputs with an oscilliscope to see if they conform to the operation described in Section 3.5. If you suspect a bad Reader, change it out with one you know is working correctly.

Once the Enable LED is flashing, Tag read operation may be checked by presenting a Tag to the Antenna and watching the read indicator LED @ DS2. In its default mode, the Interface will only report the Tag once, and only allow the Reader's LED DS2 to blink once even upon subsequent re-presentations of a Tag, unless a different Tag is used or unless the default timeout

of buffering and reporting a Tag of 2.5 seconds has elapsed. Try using the Interface's duplicate read mode that allows LED DS2 to continue blinking while the Tag is in the field. It is particularly useful to learn where an Antenna's boundaries are and which Tag orientations are best.

If LED DS2 does not blink when a Tag is presented to the Antenna, check the Antenna connections and the Signal lines. Check the Interface itself to see if it is reporting and the LED is simply not operating. Check that the Reader has a unique address.

If all this fails to solve a problem, it's time to pull out an oscilliscope. Monitor the Antenna output at TB3 for a 148 KHz sinusoidal waveform at a peak to peak voltage of 450 to 575 volts. The output is applied to the Antenna for approximately 15 milliseconds every time around the multiplex loop. The Antenna output can be constantly applied by applying the shunt at J2. A deformed sine wave r low voltage indicates a problem with the Antenna. The scope probe can be configured as an Antenna by forming a loop with the ground clip and holding it in the vicinity of the Antenna. You should observe the 148 KHz signal in free air and the amplitude should increase as you get nearer the Antenna and decrease as you move away. You can also check the Signal outputs with the scope. The amplitude of this AC signal should increase when a Tag is presented to the Antenna and decrease when it is moved away. Once the problem is identified, swap the suspect assembly with a working unit to verify your suspicions.

Return any unit you suspect of not operating correctly to RFID. An RMA number is not necessary. We will examine the unit and quote any repair before incurring any costs on your behalf, unless of course the unit is under warranty.

If you do not have the ability to perform these detailed troubleshooting steps, simply return the unit to us and we will examine it for you free of charge.

3.5 MULTIPLEX OPERATION

The Reader's multiplexing operation is controlled by the Interface via its Enable outputs. The Interface provides pulses over these wires that Enable each Reader in turn. The inputs feed into an H11L1 type Schmitt trigger optocoupler through a 1.2K Ohm current limiting (2.5 mA) resistor. The optocoupler is turned on by a + 4.5 volt (min) differential voltage between the two Enable lines. The Interface provides the required control by supplying + 5 VDC (nom)on EN and Ground on EN BAR. The pulses are generated by raising EN BAR to + 5 VDC (nom), momentarily turning off the optocoupler.

The Reader differentiates pulses of 3 different durations:

PULSE	DURATION	DESCRIPTION
Reset	2 msecs	Resets counters
Read	1 to 1.6 msecs	Activates Read LED and J2
Increment	.8 msecs	Increments Readers' counter

3.5.1 RESET PULSE

Upon detection of the Reset pulse, all Readers clear their on-board counters and disable themselves after approximately 1.7 msecs. On each Reader, the output of the counter is compared to S1's DP switch setting, when they are equal, that Reader is Enabled, voltage is applied to its Antenna and LED DS1 is lit. Hence, at the end of the Reset pulse, Reader #0 is Enabled if present, since its counter has been cleared and its contents equal S1.

3.5.2 INCREMENT PULSE

This pulse increment the counters on all of the Readers, so upon receipt of the increment pulse, all Reader counters equal 1, disabling Reader #0 and Enabling Reader #1. The Interface stops between some of these pulses to check for valid Tag data on the Signal lines. Sometimes Interfaces generate consecutive Increment pulses because they have been instructed to ignore certain Readers. It takes anywhere from 13 to 50 msecs for the Interface to detect a Tag depending on which Interface is in operation and once detected the Interface may extend the time before the next pulse to check for valid data.

3.5.3 READ PULSE

If the Interface detects valid Tag data it generates a Read pulse. The Read pulse illuminates LED DS2 to produce a valid read indication at the currently Enabled Reader and activates the remote read circuitry attached to connector J2. The Read pulse also increments the Readers' counters.

A sample pulse stream appears below for an Interface assigned to scan Readers 0,1, 5, 6, and 7 with a Tag detected at Reader 6.

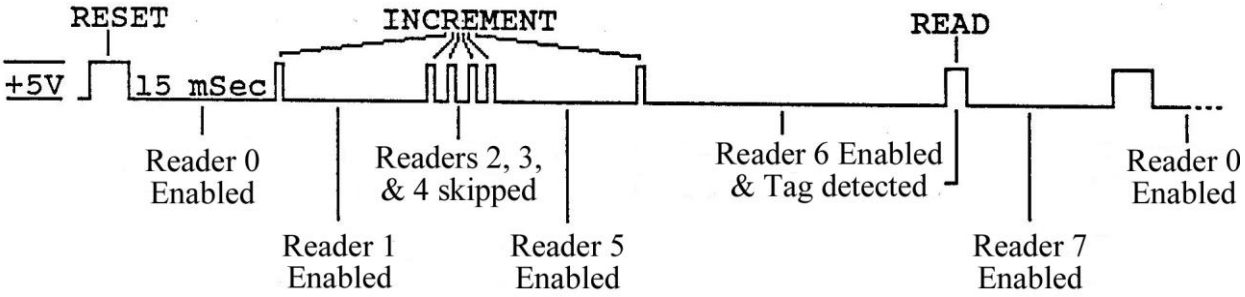

3.6 WARRANTY

RFID, Inc. products are warranted against defects in materials and workmanship for one (1) year from date of shipment. RFID, Inc. shall, at its option, either repair or replace products that prove to be defective and are returned with freight prepaid to RFID, Inc.'s plant within the warranty period. The foregoing warranty shall not apply to defects resulting from abuse, misuse, accident, alteration, neglect or unauthorized repair or installation. RFID, Inc. shall have the right of final determination as to the existence and cause of the defect.

THE WARRANTY SET FORTH ABOVE IS EXCLUSIVE AND NO OTHER WARRANTY, WHETHER WRITTEN OR ORAL, IS EXPRESSED OR IMPLIED. RFID, Inc. SPECIFICALLY DISCLAIMS THE IMPLIED WARRANTIES OR MERCHANTABILITY AND FITNESS FOR A PARTICULAR PURPOSE.

The remedies provided herein are Buyer's sole and exclusive remedies. In no event shall RFID, Inc. be liable for direct, indirect, special, incidental or consequential damages, (including loss of profits) whether based on contract, tort, or any other legal theory.